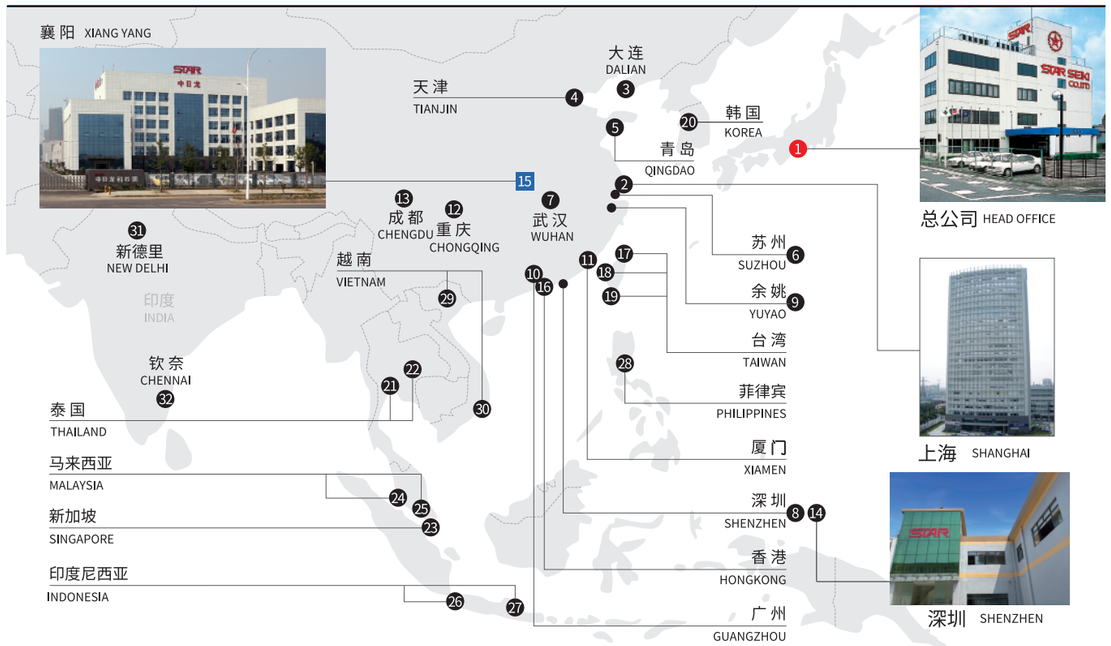

总公司 HEAD OFFICE

上海 SHANGHAI

深圳 SHENZHEN

STAR ASIA NETWORK

国家／公司名 Country／Company Name		联系方式 Contact
1 Japan	STAR SEIKI CO., LTD. 3-133, Akita, Ohguchi-cho, Niwa-gun, Aichi Pref., 480-0132, JAPAN	TEL +81-587-95-7572 FAX +81-587-95-7573
2 China	星精机械(上海)有限公司 上海市徐汇区桂平路555号46栋208室	TEL +86-21-5423 4571 FAX +86-21-5423 4570
3 China	星精机械(上海)有限公司 大连分公司	TEL +86-411-8756 2176 FAX +86-411-8756 2937
4 China	星精机械(上海)有限公司 天津分公司	TEL +86-22-5838 7675 FAX +86-22-5811 2975
5 China	星精机械(上海)有限公司 青岛分公司	TEL +86-532-5556 5517 FAX +86-532-5556 5518
6 China	星精机械(上海)有限公司 苏州事务所	TEL +86-512-6805 8385 FAX +86-512-6805 8250
7 China	星精机械(上海)有限公司 武汉事务所	TEL +86-27-8425 3500 FAX +86-27-8479 2646
8 China	星精机械(上海)有限公司 深圳分公司	TEL +86-755-2962 2620 FAX +86-755-2962 2341
9 China	星精机械(上海)有限公司 余姚事务所	TEL +86-574-6253 2721
10 China	星精机械(上海)有限公司 广州分公司	TEL +86-20-3708 4205 FAX +86-20-3708 4277
11 China	星精机械(上海)有限公司 厦门事务所	TEL +86-592-5779 994 FAX +86-592-5779 994
12 China	星精机械(上海)有限公司 重庆分公司	TEL +86-23-6036 0877 FAX +86-23-6036 0968
13 China	星精机械(上海)有限公司 成都分公司	TEL +86-28-6549 5545
14 China	星塔机械(深圳)有限公司	TEL +86-755-2724 6653 FAX +86-755-2724 6650
15 China	中日龙 (襄阳)机电技术开发有限公司	TEL +86-710-331 1813 FAX +86-710-332 0152
16 China	STAR SEIKI (HONGKONG) CO., LTD.	TEL +852-2687 6745 FAX +852-2690 4322

国家／公司名 Country／Company Name		联系方式 Contact
17 China	STAR SEIKI TAIWAN, INC.	TEL +886-2-2836 0039 FAX +886-2-2835 9987
18 China	STAR SEIKI TAIWAN, INC. TAICHUNG OFFICE	TEL +886-4-2463 1361 FAX +886-4-2463 1691
19 China	STAR SEIKI TAIWAN, INC. TAINAN OFFICE	TEL +886-6-273 8985 FAX +886-6-273 8948
20 Korea	STAR SEIKI KOREA CO., LTD.	TEL +82-32-817 0770 FAX +82-32-817 0771
21 Thailand	STAR SEIKI (THAILAND) CO., LTD.	TEL +66-2-651-0285 FAX +66-2-651-0288
22 Thailand	STAR SEIKI (THAILAND) CO., LTD. PRACHINBURI BRANCH	MOB +66-8-9927 4610
23 Singapore	STAR SEIKI SINGAPORE PTE. LTD.	TEL +65-6555-1391 FAX +65-6555-1392
24 Malaysia	STAR SEIKI (SINGAPORE) PTE. LTD. K.L. BRANCH	TEL +60-3-8601-2293 FAX +60-3-5621-0518
25 Malaysia	STAR SEIKI (SINGAPORE) PTE. LTD. J.B. BRANCH	TEL +60-7-598-7271 FAX +60-7-598-7275
26 Indonesia	PT. STAR SEIKI INDONESIA	TEL +62-21-7191729 FAX +62-21-7198870
27 Indonesia	PT.STAR SEIKI INDONESIA SURABAYA BRANCH	TEL +62-31-5453414
28 Philippines	STAR SEIKI PHILIPPINES INC.	TEL +63-49-544-0652 FAX +63-49-502-7953
29 Vietnam	STAR SEIKI (VIETNAM) CO., LTD.	TEL +844-3772-6270 FAX +844-3772-6271
30 Vietnam	STAR SEIKI (VIETNAM) CO., LTD. HO CHI MINH BRANCH	TEL +848-6297-9431 FAX +848-6297-9481
31 India	STAR SEIKI INDIA PRIVATE LIMITED	TEL +91-024-420-6807
32 India	STAR SEIKI INDIA PRIVATE LIMITED CHENNAI OFFICE	TEL +91-444-202-9923

STAR
Quality First

因改良等原因,规格及外观有所改变时,恕不另行通知,敬请包涵。
All stated here is subject to change without advance notice.
产品如有不详之处,欢迎联络弊司就近营业所。
If there is anything unknown about the product,
Please feel free to contact with our nearest office.

星精機械(上海)有限公司 上海市徐汇区桂平路555号46栋208室
STAR SEIKI(SHANGHAI)CO., LTD. TEL:021-54234571 FAX:021-54234570
http://www.starseiki.cn

星精机械(上海)有限公司 深圳分公司
广东省深圳市宝安区沙井镇博岗松山工业区松山西路6号
TEL:0755-29622620 FAX:0755-29622341

ASIA
EGII 2024.06

STAR

高端型机械手
HIGH-PERFORMANCE SERIES

EG-II SERIES

对应注塑机:40~850ton

星精机械(上海)有限公司
STAR SEIKI(SHANGHAI)CO., LTD.
http://www.starseiki.cn

全球销售及售后服务据点| NETWORK - GLOBAL

亚洲地区销售及售后服务据点（不含日本&中国） | ASIA AREA EXCEPT CHINA&JAPAN

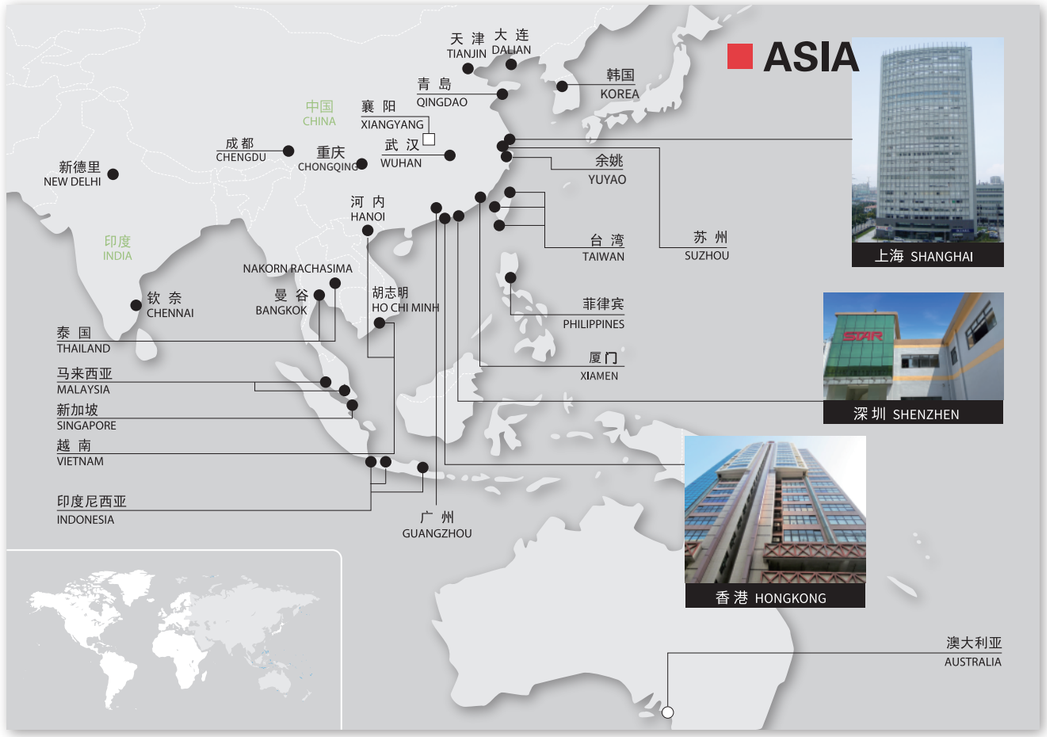

泰国 THAILAND

- STAR SEIKI (THAILAND) CO., LTD.
  BANGKOK BRANCH
  ☎ +66-2-651-0285
- STAR SEIKI(THAILAND)CO.,LTD.
  PRACHINBURI BRANCH

新加坡 SINGAPORE

- STAR SEIKI SINGAPORE PTE. LTD.
  ☎ +65-6555-1391

马来西亚 MALAYSIA

- STAR SEIKI (SINGAPORE) PTE. LTD.
  K.L. BRANCH
  ☎ +60-3-8601-2293
- STAR SEIKI (SINGAPORE) PTE. LTD.
  J.B. BRANCH
  ☎ +60-7-598-7271/3

韩国 KOREA

- STAR SEIKI KOREA CO., LTD.
  ☎ +82-32-817-0770

菲律宾 PHILIPPINES

- STAR SEIKI PHILIPPINES INC.
  ☎ +63-49-544-0652

印度尼西亚 INDONESIA

- PT. STAR SEIKI INDONESIA
  JAKARTA BRANCH
  ☎ +62-21-7191729
- PT. STAR SEIKI INDONESIA
  BEKASI BRANCH
  ☎ +62-21-82628770
- PT. STAR SEIKI INDONESIA
  SURABAYA BRANCH
  ☎ +62-31-5453414

越南 VIETNAM

- STAR SEIKI (VIETNAM) CO., LTD.
  IN HA NOI
  ☎ +84-24-3772-6270
- BRANCH OF STAR SEIKI (VIETNAM) CO., LTD.
  IN HO CHI MINH CITY
  ☎ +84-28-6297-9431

印度 INDIA

- STAR SEIKI INDIA PRIVATE LIMITED
  NEW DELHI OFFICE
  ☎ +91-124-4206-807
- STAR SEIKI INDIA PRIVATE LIMITED.
  CHENNAI OFFICE
  ☎ +91-44-4202-9923

日本销售及售后服务据点 |JAPAN

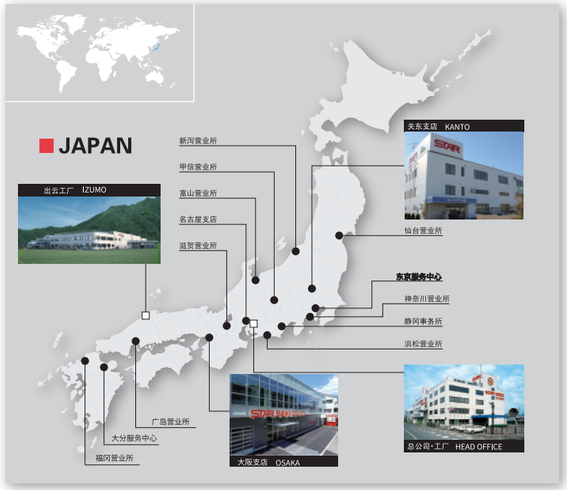

- 总部·工厂 / HEAD OFFICE / PLANT
  ☎ +81-587-95-7551(代)
  http://www.starseiki.com
- 出云工厂 / IZUMO PLANT
  ☎ +81-853-72-4311
- 关东支店 / KANTO BRANCH OFFICE
  ☎ +81-283-24-8211
- 名古屋支店 / NAGOYA BRANCH OFFICE
  ☎ +81-587-95-7557
- 大阪支店 / OSAKA BRANCH OFFICE
  ☎ +81-6-4255-8811

北美洲销售及售后服务据点/ NORTH AMERICA

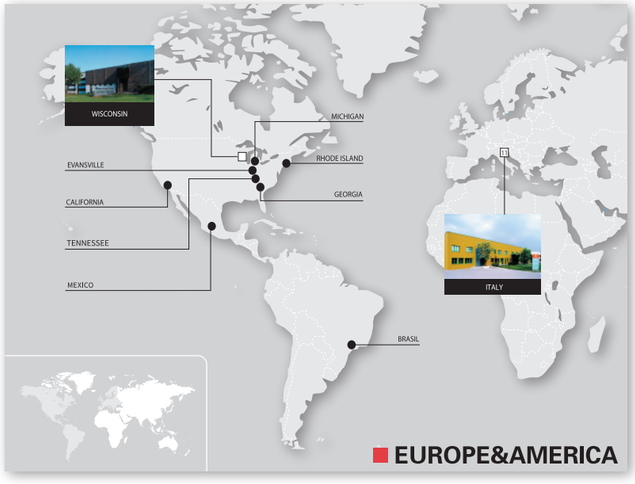

美国 U.S.A.

- STAR AUTOMATION, INC. MICHIGAN OFFICE
  ☎ +1-734-462-9522
- STAR AUTOMATION, INC. CALIFORNIA OFFICE
  ☎ +1-714-375-2400
- STAR AUTOMATION, INC. EVANSVILLE OFFICE
  ☎ +1-812-475-9947
- STAR AUTOMATION, INC. GEORGIA OFFICE
  ☎ +1-770-582-9350
- STAR AUTOMATION, INC. RHODE ISLAND OFFICE
  ☎ +1-401-434-0617
- STAR AUTOMATION, INC. TENNESSEE OFFICE
  ☎ +1-678-428-4202

美国 U.S.A.

- STAR AUTOMATION, INC. WISCONSIN
  ☎ +1-262-253-3550
  http://www.starautomation.com

墨西哥 MEXICO

- STAR SEIKI MEXICO S.A. DE C.V.
  ☎ +52-442-199-5180

南美洲 / SOUTH AMERICA

巴西 BRAZIL

- STAR SEIKI BRASIL LTDA.
  ☎ +55-11-3326-3349
  http://www.starseiki.com.br

欧洲 / EUROPE

意大利 ITALY

- STAR AUTOMATION EUROPE S.P.A.
  ☎ +39-41-57-85-311
  http://www.star-europe.com

大洋洲 / OCEANIA

澳大利亚 AUSTRALIA

- RADIUS TECHNOLOGY PTY. LTD.
  销售代理店 SALES AGENCY
  ☎ +61-3-9587-1233

EG-II SERIES

升级版EG-II机械手，新增平滑移动，高低速切换，禁止进入区域设置，最适加减速功能。采用日本尼得科高性能减速机及THK高性能导轨。更适用于细微产品的夹取和精密插件作业。

The upgraded EG-II series adds new functions, such as smooth movement, speed switching, forbid area setting, optimal acceleration and deceleration.Equiped with Japan Nideko high-per formance educer and THK high performance guide rail. Which is more suitable for small product clamping and precision plug-in.

效率提高 EFFICIENCY UP 10%

刚性提升 RIGIDITY UP 10%

寿命延长 LIFE EXTENSION 20%

能耗降低 ENERGY CONSUMPTION REDUCTION 20%

高速 HIGH SPEED

运转速度比上一代EG系列提升5%以上，系统新增平滑移动、速度切换功能，机械手运转更高速。

Compared with the previous generation EG series, the running speed is increased by more than 5%, the system adds smooth movement and speed switching functions, and the robot runs at a higher speed.

稳定 STABILITY

减速机、导轨等核心部件性能升级，搭载缓冲姿势部，系统新增重量选定等功能，机械手运转更稳定。

The performance of core components such as reducer and guide rail are improved, the buffer posture part is equipped, the system adds weight selection and other functions, and the robot runs more stably.

安全 SAFETY

系统新增：进入禁止区域、段取换密码分离等功能，机械手使用更安心。

The system adds new functions such as entering the forbidden area, segment access and password separation, which makes the use of the robot safer.

智能 INTELLIGENT

系统新增：连续补间、最适加减速功能，机械手使用更智能化。

The system adds the functions of continuous interpolation and optimal acceleration and deceleration, which makes the use of the robot more intelligent.

STEC-NC3a

操作盒 CONTROLLER

7 英寸
7 inches

宽屏液晶触摸屏
Wide Liquid Crystal Touch Panel

护角设计
Angle protect design

操作盒掉落时起保护操作盒本体的作用。
Protection in the case of controller dropping.

改变操作盒连接线接口的位置，避免断线及操作盒线触碰操作员身体。
Change of cable position to avoid interference with operators.

LAN端口 LAN connection
通过LAN接口连接PC软件、监视机械手动作等。
PC and network connections allow transmitting mail, PC connect, and remote maintenance.

USB

搭载USB端口 USB connection
通过连接USB，可实现数据（动作程序 •警报履历 • 操作履历等）管理。
USB connection can realize action program,alarm resume,operation resume and other data management.

动力电源与控制电源分离
SEPARATION OF CONTROL AND POWER SUPPLY

出现紧急情况时切断动力电源，保留控制电源，缩短安全重启、复归的时间。
Safe reboot and reduction of recovery time with emergent power source (cut off power supply, retain control power) .

通过运转准备按键给动力部分通电。
Electrifying for power system by operational ready button

制振控制功能
VIBRATION CONTROL FUNCTION

抑制轴运转中产生的振动，流畅的停止动作实现周期缩短。
Suppress the vibration generated in the operationof the shaft,and shorten the cycle with smooth stop action.

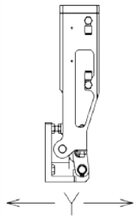

无制振控制功能
W/O vibration control

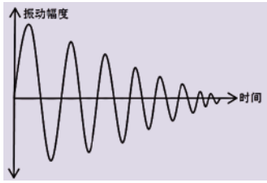

震动幅度大，停稳速度慢
Big vibration,stop slowly

带制振控制功能
W/ vibration control

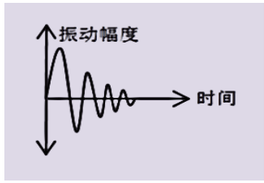

震动幅度小，停稳速度快
Small vibration, stop quickly

搭载高性能CPU,反应灵敏。
IMPROVEMENT IN OPERATION RESPONSE WITH HIGH-SPEED CPU

提高程控处理能力。
Improvement in processing capacity of sequencer.

3国语言切换
THREE-LANGUAGE SWITCHING

从日语・英语・简体中文・韩语・泰语・葡萄牙语・西班牙语・印尼语・越南语中选择3种语言，切换显示。
Three languages can be selected from Japanese, English, Simplified Chinese,Korean, Thai, and Portuguese,Spanish,Indonesian,Vietnamese.

标配绝对编码器
STANDARD USE OF ABSOLUTE ENCODER

总电源切断后，轴位置不会丢失。
The axis position will not be lost even after the main power is cut off.

速度提升 SPEED UP

◆ 平滑移动 Smooth movement

相对于定位粗略即可的点位，该功能可以在目标位置之前完成定位。通过该功能，指定的点位和下一个点位之间的动作变得顺畅，实现周期缩短。
Compared to the point position that can be roughly positioned, this function can complete the positioning before the target position.And the movement between the specified point and the next point becomes smooth and the cycle is shortened by this function.

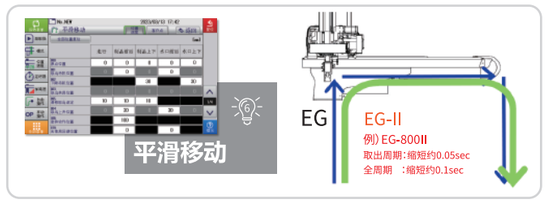

◆ 最适加减速 Optimal acceleration/deceleration

通过设定所使用的夹具板及所取工件的重量、设定最适合的加减速。通过设定适当的加减速，有助于减轻振幅和加快循环速度。
此外、EG-800SII、EGW-800SII、机种还可通过选项功能实现最大可搬重量的提升。EG-II系列，最适合加减速参数设定不再是3挡、而是设定为5挡。

The optimal acceleration/deceleration is set by setting the weight of the chuck plate and workpiece to be used. Setting the appropriate acceleration and deceleration helps to reduce the amplitude and speed up the cycle. In addition, the maximum movable weight is also increased as an option for the EG-800SII, EGW-800SII. The most optimal acceleration/deceleration parameters of the EG-II series are no longer set to 3, but set to 5.

◆ 连续补间（仅Full NC）
Continuous interpolation(Full NC only)

最多可持续执行30个直线补间、圆弧补间，而不会减速或停止。在需要复杂轨迹实现平滑动作的场景中非常有效。
Up to 30 line interpolation, arc interpolation can be executed without slowing down or stopping.Very effective in scenarios where complex trajectories are needed to achieve smooth movements.

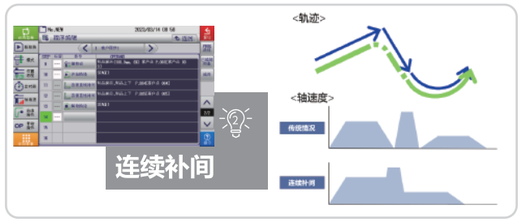

◆ 速度切换 Speed switching

可实现在位置点移动途中切换速度。从高速到低速，低速到高速均可以自由设置。在插件工件供给、供给后拔出等需要低速动作的高难度动作中，在最低限度降低循环中进行处理，可以降低示教难易度。此外，最多可设定20个点位，点位的指定在调试系统中进行。标准规格中仅限装箱设置。因此，请根据规格指定对象点。
The speed can be switched from high speed to low speed, low speed to high speed freely while the position point is moving.In difficult teaching that require slow operation, such as insertion work supply and extraction after supply, processing is carried out in a minimum reduction cycle, which can reduce the difficulty of teaching.A maximum of 20 points can be set, and points are specified by the debugging system. Only box Settings are available in the standard specification ,so please specify the target point according to the specification.

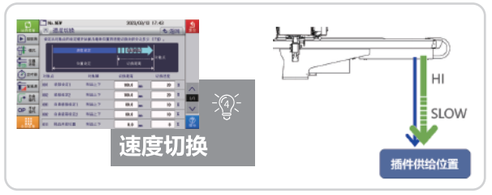

新型姿势部 NEW POSTURE UNIT

◆ 缓冲姿势部 Posture unit w/cushioning

与标准姿势部相比，姿势翻转及恢复时的振动得到抑制。在短周期成型等中发挥其真正价值。

The vibration of posture reversal and return is suppressed, which gives full play to its real value in short cycle molding.

核心部件寿命提升

SERVICE LIFE OF CORE COMPONENTS UP

◆ 减速机 Reducer

采用了全新VRS系列。使用寿命是原来的3倍以上。此减速机并非于直角坐标机械手的常用品，而是加工机等高强度要求设备行业用品。

A new VRS series is adopted with a service life of more than three times. This reducer is not a common product of straight robot, but a high-strength equipment industry product such as processing machines.

减速机 Reducer

使用寿命是原来的3倍以上

A service life more than three times.

◆ 线性导轨 LM Guide

采用SHS及SSR系列，使用寿命延长1倍以上。与减速机一样通过等级提升来增加强度。

SHS and SSR series are used to extend the service life by more than 1 times.The strength is increased by grade upgrading as with reducer.

线性导轨 LM Guide

使用寿命延长1倍以上

The service life by more than 1 time.

姿势NC POSTURE NC

◆ 姿势·旋转轴NC Posture & rotation NC

装备伺服马达驱动的姿势轴和旋转轴，在执行夹取、剪切、装箱、嵌件等动作时，可以自由设定位置。

AC servo motor which are euqipped in posture and rotation axes.It can set the position freely as extraction, gate cutting, packaging or insert motion.

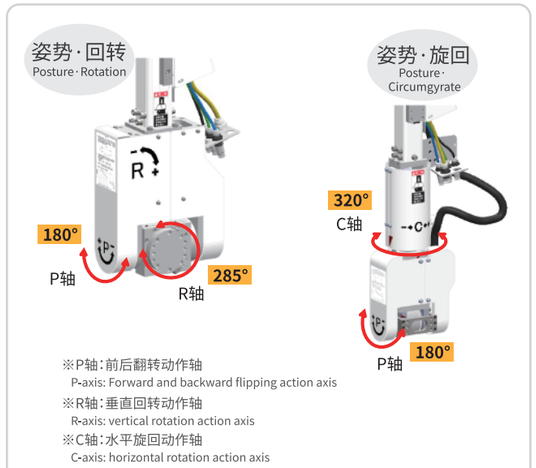

节能 ENERGY SAVING FEATURE

伺服休眠功能 Servo sleep feature

超过设定的时间后进入待机状态，自动OFF马达电源。

It enters the standby state and automatically turns off the motor power supply after exceeding the set time.

成型周期自动联动 Mold cycle auto link

机械手的动作配合成型周期，与注塑机同步动作。

Operation of the unloader is synchronized to the mold cycle.

节能监测功能 Energy-saving monitor

通过画面确认耗电量，及时发现电量浪费现象，节约用电 。

Display of consumed electric power for power savings.

环保设计 LOW STRESS ON ENVIRONMENT

环保设计 Environmentally friendly design

减少铅、六价铬等环境有害物质的使用，专为环保而设计。

Environmental loading materials such as lead and hexavalent chromium are reduced.

符合RoHS Conforms to RoHS

提高生产效率

IMPROVED PRODUCTION EFFICIENCY

◆ 生产支援功能 Production control feature

输入预定生产数量即可显示出生产完成时间。另有显示生产实际数量统计表和抽样检查功能，更有利于成型品的品质管理。

Inputs the number of pieces to be produced, and the estimated time of production is displayed. Other features such us graphing of production results and sampling also contribute to better product quality control.

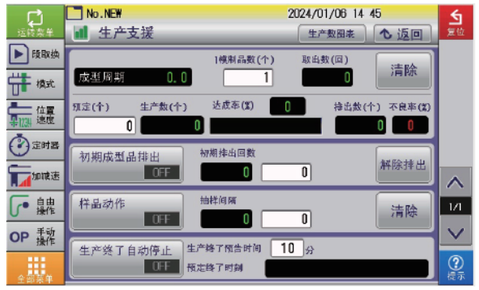

◆ 初期成型品排出 Initial products release

◆ 抽样检查功能 Sample release

IoT机能 IoT FUNCTION

◆ 运行监视 Operation monitoring

是指定期将机械手运行信息通过CSV文件的形式发送到服务器的功能。

A function that periodically sends the operation information of the extraction robot to the server as a CSV file.

◆ 实时监视 Real-time monitor

是能够从外部实时监控机械手的运行信息的功能。

A function that can monitor external information in real time.

※这两种功能都是如今需求较多为对应IOT的功能。

※需要增设通信基板ECI01才能支持。

*Both are functions for IOT, which is often required in recent years.

*The ECI01 communication board must be added to support this feature.

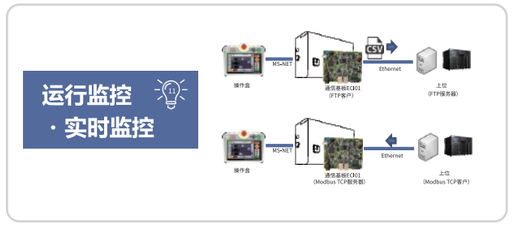

FULL NC编程

FULL NC PROGRAMMING

◆ CNC编程功能 CNC program editing function

可以简单自由的编写自动运转程序。通过调用预备的吸着及夹取等模块程序可以简单地进行编程；通过直线及弧线动作的插入组合，可实现各种机器人的动作；优化输入输出信号的排布，并引入信号检索功能，使得客户可以更加快速的对信号进行选择，提升编程效率。

It can be simply and freely edited auto operation program. It can be programmed simply by calling the preset suction and clamp moduleprogram. Various robot actions can be realized by the combination of straight line and arc action, by optimizing the layout of input and output signals and introducing signal retrieval function, customers can select signals more quickly and improve programming efficiency.

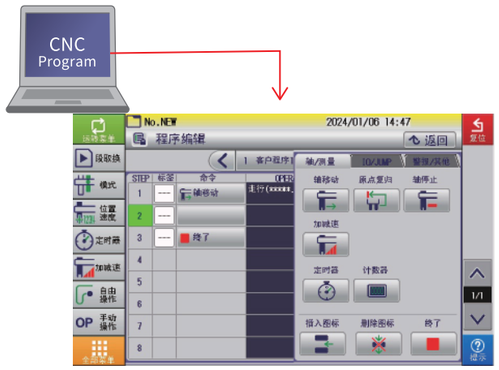

◆ 客户程序 Customer program

通过简单的命令输入，客户可自行对取出机的动作进行编程。STEC-NC3a通过改善用户界面和添加功能提高了操作性。

·通过程序编号、I/O的显示、I/O的选择方法的改善，缩短程序制作时间。

·通过增加“连续步进功能”来减少程序确认时间等。

Customers can program the operation themselves by entering simple commands.STEC-NC3a improves operability by improving the user interface and adding features.

·Shorten program production time by improving program numbering, I/O display and I/O display selection methods.

·Reduce program confirmation time by adding "continuous step function"

EG-II SERIES

标准功能

	功能名	功能说明
取出侧	取出下降待机	开模完毕前， 夹具下降至模具附近待机， 有效缩短取出周期。可任意变更设定位置。
	前进取出侧姿势控制	在姿势动作的状态下通过安全门上方。为避免在姿势动作状态下夹具与走行体或者模具上方障碍物干涉， 姿势动作的前后位置可以任意设定。
	吸着确认单元 (1回路)	使用真空发生单元1回路取出产品。
	自由滑移取出	取出有扣位的产品时， 在抓取到产品后根据轴设定值移动， 解除扣位后取出产品。
	顶针联动	抓取到产品后， 通过与注塑机的顶针联动取出产品。
	顶针后退联动	抓取住产品后， 通过注塑机的顶针联动， 取出产品。
	水口模内开放	产品或水口从模具上剥离后， 需要直接在模内开放时选择此功能。
	前后自由伺服点	在产品夹取位置限制前后轴的伺服马达扭矩， 防止对手臂增加负荷时造成损伤。
走行	走行途中姿势	走行前进与姿势动作同时执行，走行复归与姿势复归同时进行，可缩短周期。
	浇口途中落下 (走行.复归)	浇口往返走行途中进行开放动作。
	不良品排出	与注塑机发出的不良品信号联动， 进行不良品排出动作。
	初期成型品排出	自动开始后， 根据初期不良品排出计数器的设定， 将设定数值内的产品开放到不良品位置。
	横走行待机	如果模具上方有障碍物， 机械手或者夹具在模具没有完全打开的情况下有干涉时， 机械手可以在模具外等待模具完全打开后走行复归。
落下侧	落下侧下降途中姿势	在产品开放下降途中进行姿势反转动作。在上升途中进行姿势反转复位动作。
	装箱点(各轴256点)	与输送带或排列机等装箱设备联动， 进行产品的装箱动作。（各轴256点）。
	自由装箱点 (8级，共1024点)	设定从注塑机中取出的产品的随机开放顺序。
	输送带启动信号	产品开放完毕后， 启动输送带动作信号。
其他	3国语言切换 (简体中文、日文、英文)	操作盒的显示画面可切换3国语言。日语・英语・汉语(简体字)为基本的切换语言。
	插入式用户编程	NC步进程序的简易设定功能。在步进操作中可指定插入位置。
	操作盒内置存储记忆	换模信息(最大999套)保存在 Micro SD卡。
	设定值隐藏功能	通过隐藏功能只显示需要的轴点、时间等， 能够缩短设定时间, 提高作业效率。
	伺服休眠	在超过设定时间后的待机中， 关闭马达电源。
	背景灯自动OFF	超过[显示OFF时间」设定的时间如果不操作操作盒， 背景灯则关闭。
	伺服监视 (波形监视)	可以通过操作盒监视各轴的速度， 电流等数据及波形信息。

选项功能

	功能名	选项编号	功能说明
取出侧	制品确认2/4回路	8049-01/02	使用真空发生单元2/4回路取出产品
	夹具内剪刀回路	0008-01	追加夹具内剪切浇口用电磁阀。
	夹具内剪刀（带引拔）	0008-03	追加夹具内剪切浇口和剪刀引拔用电磁阀。
	回转机构（I,II,III,IV）	0025-01/02/03/04	通过追加的回转气缸来避开位置干涉或改变制品开放的状态。
	吹气回路（模具）	0019-01	通过追加的大流量吹气电磁阀和气管来吹掉模具内的毛刺和粉尘。
落下侧	制品2/4/8点开放	0001-02/03/04	在二/四/八处进行制品开放动作。 产品夹取变为2/4/8回路。
	吸着2/4/8点开放	0001-10/11/12	在二/四/八处进行制品开放动作。 产品吸着变为2/4/8回路。
	NT剪切可动侧（有单元，带电磁阀）	0009-01	以处理产品水口为目的，在落下侧的走行导轨端安装NT单元气剪，切断水口。
	NT剪切可动侧（无单元，带电磁阀）	0009-02	以处理产品水口为目的，在落下侧的走行体下方安装气剪和剪刀引拔用电磁阀。
其他	警报灯（红色，无蜂鸣器）	0024-01	机械手发生警报 (异常) 时，警报灯亮。因机种不同，警报灯的安装位置也有所不同。 需确认。
	自动快速交换用夹具（气压式）	8003-01	可快速装卸夹具。
	IOT机能	8070-01	协助客户工厂完成智能化、可视化改造。
	姿势，旋转NC控制（同时动作）	0052-03	姿势和旋转轴同时动作，以缩短周期。
	欧规12	0063-02	成型机～取出机之间的联锁接口，是作为欧洲及美国市场的标准而制定的规格。
	亚洲规格欧规67（简装版）	8000-01	成型机～取出机之间的联锁接口，是作为欧洲成型机出口到中国市场的标准而制定的规格。

STANDARD FUNCTIONS

	Function Name	Description
Product Extract Side	Delayed arm descent	Shorten the cycle time by making the product-side/runner-side vertical arm stand by just above the mold. Setting position is adjustable.
	Crosswise product extract side posture control	Used to first carry out posture action on the extracting side and then start traverse action after extracting vertically extended products. Avoid interference with an obstacle on mold or the traverse rail, used to carry out the posture action after the completion of advance action. Crosswise position is adjustable.
	Vacuum confirmation unit (1 circuit)	Products are extracted with vacuum generator(tacovam) 1 circuit.
	Free extract for under-cut mold	Extracting the products with snap joints, moving it according to axis setting after taking the products. The products can be extracted after unlocking the joints.
	Ejector link	Product extraction is performed connecting with the ejector of IMM.
	Ejector return link	The ejector of IMM is interlocked after holding a product.
	Runner release within mold	Used to release products or runners within mold after pulling them out of the mold.
	Crosswise Free Servo point	The torque of the servo motor of an anteroposterior axis is restricted in a product chuck position. The damage to when load is added to an arm is prevented.
Traverse	Posture control during traverse	Traverse forward and postural action、traverse return and postural return are performed at the same time ,which can shorten the cycle.
	Midway Sprue Release(Traverse·Return)	Runner is released during traverse or return motion.
	Defective product Release	Defective products are separated from other products interlocked with the defect signal of IMM.
	Initial Products Release	Ejects only the number of extracted products and sprues preset with the counter to the ejection position after the start of automatic operations when faulty products exist after the continuation of molding following the replacement of the metal mold or material . Normal operations are then performed after this.
	Delayed traverse	Make the unloader stand by out of the molding machine's door if there are obstacles in the mold moving section.
Product Release Side	Posture midway descent at release side	Operation of posture reversal is carried out in the middle of downward of product opening. Return operation of posture reversal is performed in the middle of a rise.
	Point packaging(Max 256 points)	Packaging operation carried out by linking with packaging device of conveyer or of pallet changer. (Max 256 points)
	Point free packaging (8 stage，Max 1024 point)	Set the order to randomly release the products extracted form the molder.
	Start singal of conveyor	After opening a product wide, the signal of a conveyor start is taken out.
Other	Three language exchange	Language switching between three languages can be used for display. Basically used languages are Japanese, English, and Chinese (new character format).
	Easy NC steps(USER PROGRAM EDITING)	Features the simple NC step program settings. This makes it possible to designate positions for interruptions in mold changing operations.
	pendant storage memory	Recordable step changes（Max 999 molds）. A memory is carried out to Micro SD card.
	Default blind feature	The teaching time is reduced by the default blind feature that enables only axis point, timer, etc, required for actions to display. The operation efficiency is improved .
	Servo sleep feature	Motor power is turned off after the set time.
	Backlight Auto OFF	The backlight goes out if no pendant operation is performed for the period set with the[DISPLAY OFF TIME] function.
	Servo monitor(Wave shape monitor)	Monitor the speed of each axis, current and wave shape informations by pendant.

OPTION FUNCTIONS

	Function Name	Code no.	Description of option
Product Extract Side	Product confirmation(2circuits/4circuits)	8049-01/02	Use vacuum unit 2/4 circuit to extract the product.
	Air nipper in chuck	0008-01	Add an electromagnetic valve for the clipper inside the fixture to cut the sprue.
	Air nipper in chuck(W/Pul)	0008-03	Add electromagnetic valve for the clipper inside the fixture to cut the sprue and add electromagnetic valve to pull/push that clipper.
	Product ratation unit(I,II,III,IV)	0025-01/02/03/04	Avoid position interference or change the open state of the product by adding a rotary cylinder.
	Air blow circuit(mold)	0019-01	Blow off burrs and dust inside the mold with additional high-flow air blow electromagnetic valve and air pipe.
Product Release Side	Release products at two/four/ eight different points	0001-02/03/04	Open the products at positions two/four/eight. Product gripping becomes 2/4/8 circuits.
	Release products at two/four/eight different points W/Vacuum	0001-10/11/12	Open the products at positions two/four/eight. Product suction becomes 2/4/8 circuits.
	NT gate cut on crossmember of moving side(W/Unit,W/Valve)	0009-01	To handle product gates, install an NT unit air cutter at the end of the traveling guide on the release side to cut the gates.
	NT gate cut on crossmember of moving side(W/O Unit,W/Valve)	0009-02	To handle product gates, install electromagnetic valves for pulling/pushing clipper and gate cutting below the traveling body on the release side.
Other	Alarm Lamp(Red color,w/o buzzer)	0024-01	When the robot triggers an alarm (abnormality), the alarm light turns on. The installation position of the alarm light varies depending on the robot model. Confirmation is required.
	Quick chuck change automatic(air sw)	8003-01	Quick-change fixtures.
	IOT functional	8070-01	Assist customers' factories in achieving intelligent and visual transformation.
	Servo posture and rotation (simultaneous action)	0052-03	Simultaneous movement of posture and rotation axis to shorten the cycle.
	EUROMAP 12(SPI)	0063-02	The interlock interface between the molding machine and the robot to meet the requirement of the standard for the European and American markets.
	EUROMAP 67	8000-01	The interlock interface between the molding machine and the robot to meet the requirement of the standard for European molding machines exported to the Chinese market.

■ STAR机种名称说明 | IMPROVED PRODUCTION EFFICIENCY

EG W - 800 s II

- **EG**：机种系列名，其他还有ES系列、SP系列等
  Series of models,others, ES series, SP series etc.
- **W**：W表示机器为双截，不带W为单截机型
  With W means the robot is double arm. W/O W means it is single one.
- **800**：制品臂标准上下行程长度，EGW-800sII表示此机种标准制品臂上下行程为800mm
  The normal vertical stroke of product arm. For EGW-800sII,it means the normal vertical stroke of product arm is 800mm.
- **s**：s表示水口臂，带s为双臂机型，不带s为单臂机型
  s means runner arm.It is two vertical arms with s. On the contrary,it's single arm without s.
- **II**

■ 例，EGW-800sII即为EG-II系列，标准制品臂上下行程为800mm的双截带水口臂的双臂机型。
EG-1000II即为EG-II系列，标准制品臂上下行程为1000mm的单截无水口臂的单臂机型。

Example : EGW-800sII is one of EG-II series, which is a double-arm model with a standard vertical stroke of 800mm.
EG-1000II is one of EG-II series,which is a single-arm model with a standard vertical stroke of 1000mm.

■ 机器尺寸图注字母意义说明 | The machine size drawing is indicated by letters

A	全高	Overall height
B	全宽	Overall width
C	走行行程	Traverse stroke
D	落下侧突出位置	Overhang,release side
E	取出侧突出位置	Overhang,product side
F	制品侧上下行程	Ⓟ Vertical stroke
G	制品侧上下待机位置	Ⓟ Vertical standby
H	夹具安装位置上方有效尺寸	Bottom of crosswise to chuck mount position
I	前后单元	Crosswise arm
J	本体厚度	Thickness
K	水口侧上下待机位置	Ⓡ Vertical standby
L	制品前进MAX	Ⓟ Crosswise reach max
M	制品前后行程MAX	Ⓟ Crosswise stroke max
N	制品前后待机MIN	Ⓟ Crosswise standby min
O	制品臂、水口臂接近MIN	Ⓟ Ⓡ Proximity min
P	Ⓡ：水口侧前后行程MAX	Ⓡ Crosswise stroke max
Q	Ⓡ：水口侧前后待机MIN	Ⓡ Crosswise standby min
d	拖链伸出距离	The protruole distance of cable chain

全伺服驱动机械手
Full servo drive robot

单截 Single ARM
40~100ton 注塑机用
Injection press range 40~100ton

综合参数 | GENERAL SPECIFICATIONS

电 源 Power Source	常用气压 Air Pressure	驱动方式 Drive System	姿势(气缸) Posture (Air Cylinder)	气动姿势部推力(气压:0.5Mpa时) Air Cylinder Driving Force (Air Pressure at 0.5Mpa) 最大可搬重量 Max. Load	姿势力矩 Posture Torque	控制箱 Control Box
AC200V ±10% 50/60Hz(三相) 3 Phase	0.5Mpa	AC伺服马达 AC Servo Motor	90°固定 90°Fixed	标准姿势部：3kg Standard posture: 3kg (含夹具重量 Incl Chuck Weight)	5.4N·m	STEC-NC3a

机 种 Model	行程(移动量)(mm) Stroke 制品上下 P Vertical	水口上下 R Vertical	前 后 Crosswise	走 行 Traverse	电源设备容量 (KVA) Electric Consumpiton	最大消费电力 (KW) Max Power Consumpiton	机器重量(kg) Net Weight 本 体 Main Body	操作盒 Pendant	空气消耗量 (Nℓ/周期) Air Consumption (Nℓ/Cycle)
EG-650II	650 [800]	–	70～550 [70～670]	1200 [1000] [1400] [1600]	2.9	1.7	171	2.0	1.3
EG-650sII		700 [850]	Ⓟ 220～550 Ⓡ 99～429 [Ⓟ 220～670 Ⓡ 99～549]		3.5	2.1	189		

◎[ ]尺寸表示选项行程。
◎本体重量包括控制箱及电缆线的重量。
◎ Ⓟ 表示制品侧手臂，Ⓡ表示水口侧手臂。

◎Figure in [ ] shows option stroke.
◎Net weight includes the weight of interlock box and driver box.
◎In the column of stroke ,Ⓟ stands for product side arm and Ⓡ stands for runner side arm.

外观尺寸 | OUTER DIMENSIONS

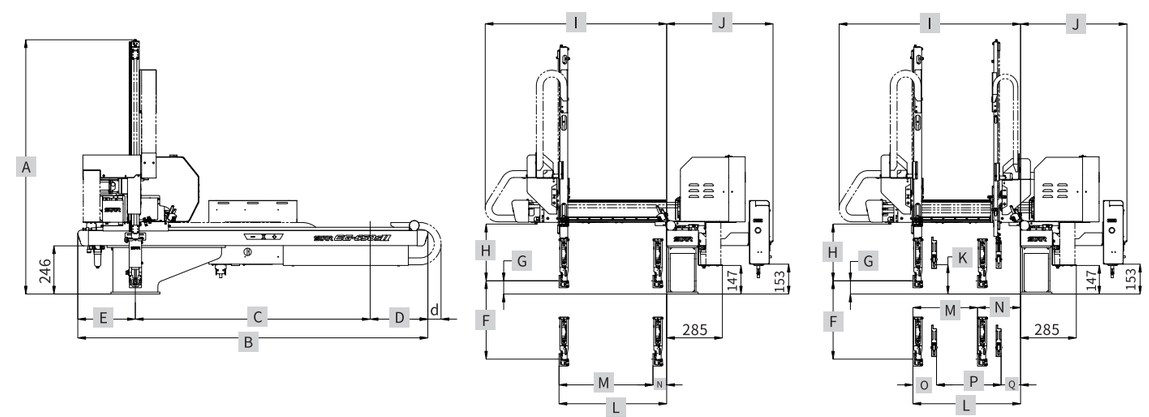

◎[ ]内的尺寸表示选项行程。/ Figure in [ ] shows option stroke.
◎水口夹的厚度为25mm。/ Thickness of runner chuck is basically about 25 mm.
◎姿势部厚度为51mm。但根据配管方式不同,此尺寸多少会有些不同。/ Thickness of posture area is basically about 51 mm (depends on tubing)
◎水口侧上下行程比制品侧上下行程长50mm。/ Runner side vertical stroke is 50 mm longer than that of product side.

◎*1表示F尺寸为800mm。 / *1 When dimension F is 800 mm.
◎*2表示C尺寸为1000mm。/ *2 When dimension C is 1000 mm.
◎*3表示C尺寸为1400mm。/ *3 When dimension C is 1400 mm.
◎*4表示C尺寸为1600mm。/ *4 When dimension C is 1600 mm.
◎*5表示L尺寸为670mm。/ *5 When dimension L is 670 mm.

(mm)

机种 Model	A	B	C	D	E	F	G	H	I	J	K	L	M	N	O	P	Q
EG-650II	1272 [1419]*1	1788 [1788]*2 [2208]*3 [2208]*4	1200 [1000]*2 [1400]*3 [1600]*4	294 [294]*2 [314]*3 [314]*4	294 [494]*2 [494]*3 [294]*4	650 [800]*1	67 ★	290	927 [1047]*5	544	–	550 [670]*5	480 [600]*5	70	–	–	–
EG-650sII	1300 [1436]*1										117		330 [450]*5	220	121	330 [450]*5	99

※反操作时D值为280、[280]*2、[300]*3、[300]*4
E值为308、[508]*2、[508]*3、[308]*4
As anti-operator side D is 280、[280]*2、[300]*3、[300]*4
E is 308、[508]*2、[508]*3、[308]*4

★EG-650(s)G尺寸为70mm.

※d值正操作时为63、[63]*2、[0]*3、[0]*4
反操作时为78、[78]*2、[0]*3、[0]*4
As operator side d is 63、[63]*2、[0]*3、[0]*4
anti-operator side d is 78、[78]*2、[0]*3、[0]*4

全伺服驱动机械手
Full servo drive robot

单截 Single ARM
100~350ton 注塑机用
Injection press range 100~350ton

综合参数 | GENERAL SPECIFICATIONS

电 源 Power Source	常用气压 Air Pressure	驱动方式 Drive System	姿势(气缸) Posture (Air Cylinder)	气动姿势部推力(气压:0.5Mpa时) Air Cylinder Driving Force (Air Pressure at 0.5Mpa) 最大可搬重量 Max. Load	姿势力矩 Posture Torque	控制箱 Control Box
AC200V ±10% 50/60Hz(三相) 3 Phase	0.5Mpa	AC伺服马达 AC Servo Motor	90°固定 90°Fixed	标准姿势部:5kg Standard posture: 5kg (含夹具重量 Incl Chuck Weight)	13.1N·m [22N·m]	STEC-NC3a

机 种 Model	行程(移动量)(mm) Stroke 制品上下 Ⓟ Vertical	水口上下 Ⓡ Vertical	前 后 Crosswise	走 行 Traverse	电源设备容量 (KVA) Electric Consumpiton	最大消费电力 (KW) Max Power Consumpiton	机器重量(kg) Net Weight 本 体 Main Body	操作盒 Pendant	空气消耗量 (Nℓ/周期) Air Consumption (Nℓ/Cycle)
EG-800II	800 [1000]	–	90~850 [90~1000]	1400 [1200] [1600] [1800]	2.9	1.7	230	2.0	2.9
EG-800sII		850 [1050]	Ⓟ 245~850 Ⓡ 105~710 [Ⓟ 245~1000 Ⓡ 105~860]		3.5	2.1	250		

◎[ ]尺寸表示选项行程。
◎本体重量包括控制箱及电缆线的重量。
◎ Ⓟ 表示制品侧手臂，Ⓡ表示水口侧手臂。

◎Figure in [ ] shows option stroke.
◎Net weight includes the weight of interlock box and driver box.
◎In the column of stroke, Ⓟstands for product side arm and Ⓡ stands for runner side arm.

外观尺寸 | OUTER DIMENSIONS

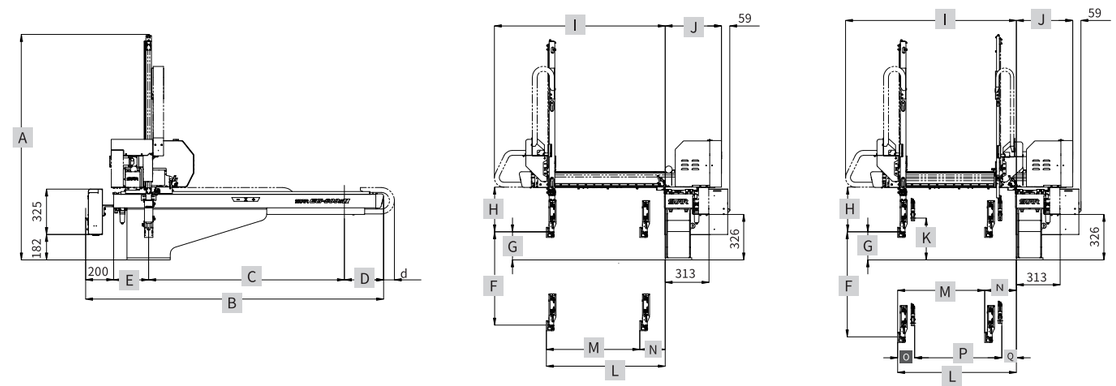

◎[ ]内的尺寸表示选项行程。/ Figure in [ ] shows option stroke.
◎水口夹的厚度为25mm。 / Thickness of runner chuck is basically about 25 mm.
◎姿势部厚度为69mm。但根据配管方式不同,此尺寸多少会有些不同。/ Thickness of posture area is basically about 69 mm (depends on tubing)
◎水口侧上下行程比制品侧上下行程长50mm。 / Runner side vertical stroke is 50 mm longer than that of product side.

◎*1表示F尺寸为1000mm。 / *1 When dimension F is 1000 mm.
◎*2表示C尺寸为1200mm。/ *2 When dimension C is 1200 mm.
◎*3表示C尺寸为1600mm。/ *3 When dimension C is 1600 mm.
◎*4表示C尺寸为1800mm。/ *4 When dimension C is 1800 mm.
◎*5表示L尺寸为1000mm。/ *5 When dimension L is 1000 mm.

(mm)

机种 Model	A	B	C	D	E	F	G	H	I	J	K	L	M	N	O	P	Q
EG-800II	1574 [1774]*1	2130 [2130]*2	1400 [1200]*2 [1600]*3 [1800]*4	280 [280]*2 [300]*3 [300]*4	250 [450]*2 [450]*3 [250]*4	800 [1000]*1	201 ★	318	1222 [1295]*5	402	–	850 [1000]*5	760 [910]*5	90	–	–	–
EG-800sII	1612 [1812]*1	[2550]*3 [2550]*4									251		605 [755]*5	245	140	605 [755]*5	105

※反操作时D值为263、[263]*2、[283]*3、[283]*4
E值为267、[467]*2、[467]*3、[267]*4
As anti-operator side D is 263、[263]*2、[283]*3、[283]*4
E is 267、[467]*2、[467]*3、[267]*4

★EG-800(s)G尺寸为90mm.

※d值正操作时为77、[77]*2、[45]*3、[45]*4
反操作时为35、[35]*2、[5]*3、[5]*4
As operator side d is 77、[77]*2、[45]*3、[45]*4
anti-operator side d is 35、[35]*2、[5]*3、[5]*4

全伺服驱动机械手
Full servo drive robot

单截 Single ARM
250~450ton 注塑机用
Injection press range 250~450ton

综合参数 | GENERAL SPECIFICATIONS

电 源 Power Source	常用气压 Air Pressure	驱动方式 Drive System	姿势(气缸) Posture (Air Cylinder)	气动姿势部推力(气压:0.5Mpa时) Air Cylinder Driving Force (Air Pressure at 0.5Mpa) 最大可搬重量 Max. Load	姿势力矩 Posture Torque	控制箱 Control Box
AC200V ±10% 50/60Hz(三相) 3 Phase	0.5Mpa	AC伺服马达 AC Servo Motor	90°固定 90°Fixed	标准姿势部:5kg Standard posture: 5kg (含夹具重量 Incl Chuck Weight)	22N·m	STEC-NC3a

机 种 Model	行程(移动量)(mm) Stroke 制品上下 Ⓟ Vertical	水口上下 Ⓡ Vertical	前 后 Crosswise	走 行 Traverse	电源设备容量 (KVA) Electric Consumpiton	最大消费电力 (KW) Max Power Consumpiton	机器重量(kg) Net Weight 本 体 Main Body	操作盒 Pendant	空气消耗量 (Nℓ/周期) Air Consumption (Nℓ/Cycle)
EG-1000II	1000	–	90~1000	1800 [1600]	2.9	1.7	253	2.0	3.3
EG-1000sII		1050	Ⓟ 245~1000 Ⓡ 105~860		3.5	2.1	274		

◎[ ]尺寸表示选项行程。
◎本体重量包括控制箱及电缆线的重量。
◎ Ⓟ 表示制品侧手臂，Ⓡ表示水口侧手臂。

◎Figure in [ ] shows option stroke.
◎Net weight includes the weight of interlock box and driver box.
◎In the column of stroke, Ⓟstands for product side arm and Ⓡ stands for runner side arm.

外观尺寸 | OUTER DIMENSIONS

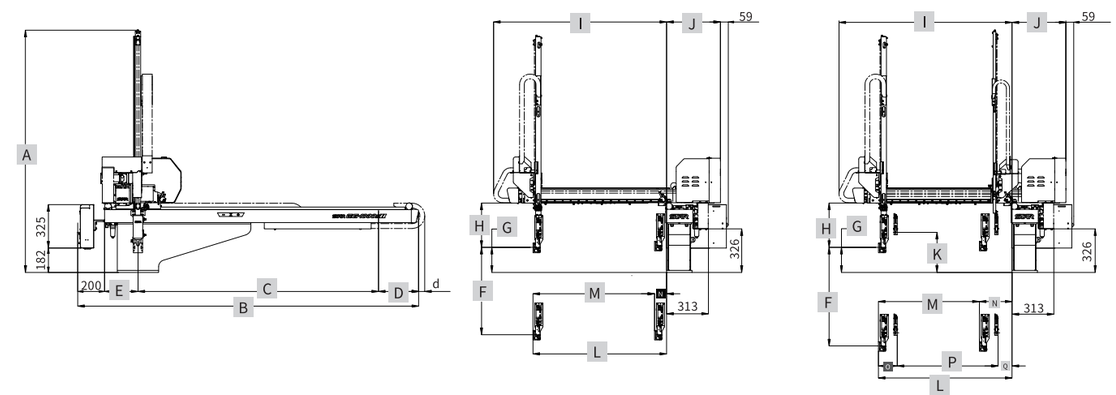

◎[ ]内的尺寸表示选项行程。/ Figure in [ ] shows option stroke.
◎水口夹的厚度为25mm。 / Thickness of runner chuck is basically about 25 mm.
◎姿势部厚度为74mm。但根据配管方式不同,此尺寸多少会有些不同。/ Thickness of posture area is basically about 74 mm (depends on tubing)
◎水口侧上下行程比制品侧上下行程长50mm。 / Runner side vertical stroke is 50 mm longer than that of product side.
◎*1表示C尺寸为1600mm。/ *1 When dimension C is 1600 mm.

(mm)

机种 Model	A	B	C	D	E	F	G	H	I	J	K	L	M	N	O	P	Q
EG-1000II	1774	2550 [2550]*1	1800 [1600]*1	300 [300]*1	250 [450]*1	1000	188 ★	331	1295	402	–	1000	910	90	–	–	–
EG-1000sII	1812										238		755	245	140	755	105

※反操作时D值为283、[283]*1
E值为267、[467]*1
As anti-operator side D is 283、[283]*1
E is 267、[467]*1

★EG-1000(s)G尺寸为90mm.

※d值正操作时为45、[45]*1
反操作时为5、[5]*1
As operator side d is 45、[45]*1
anti-operator side d is 5、[5]*1

EG-II SERIES

全伺服驱动机械手
Full servo drive robot

单截 Single ARM
350~650ton 注塑机用
Injection press range 350~650ton

综合参数 | GENERAL SPECIFICATIONS

电 源 Power Source	常用气压 Air Pressure	驱动方式 Drive System	姿势(气缸) Posture (Air Cylinder)	气动姿势部推力(气压:0.5Mpa时) Air Cylinder Driving Force (Air Pressure at 0.5Mpa) 最大可搬重量 Max. Load	姿势力矩 Posture Torque	控制箱 Control Box
AC200V ±10% 50/60Hz(三相) 3 Phase	0.5Mpa	AC伺服马达 AC Servo Motor	90°固定 90°Fixed	标准姿势部:13kg Standard posture: 13kg (含夹具重量 Incl Chuck Weight)	63.0N·m	STEC-NC3a

机 种 Model	行程(移动量)(mm) Stroke 制品上下 P Vertical	水口上下 R Vertical	前 后 Crosswise	走 行 Traverse	电源设备容量 (KVA) Electric Consumpiton	最大消费电力 (KW) Max Power Consumpiton	机器重量(kg) Net Weight 本 体 Main Body	操作盒 Pendant	空气消耗量 (Nℓ/周期) Air Consumption (Nℓ/Cycle)
EG-1200II	1200 [1400]	–	140～1240	1800 [1600] [2000] [2200]	3.5	2.1	435	2.0	5.01
EG-1200sII		1250 [1450]	Ⓟ 270～1240 Ⓡ 82～1052		4.7	2.8	470		

◎[ ]尺寸表示选项行程。
◎本体重量包括控制箱及电缆线的重量。
◎ Ⓟ 表示制品侧手臂，Ⓡ表示水口侧手臂。

◎Figure in [ ] shows option stroke.
◎Net weight includes the weight of interlock box and driver box.
◎In the column of stroke,Ⓟstands for product side arm and Ⓡ stands for runner side arm.

外观尺寸 | OUTER DIMENSIONS

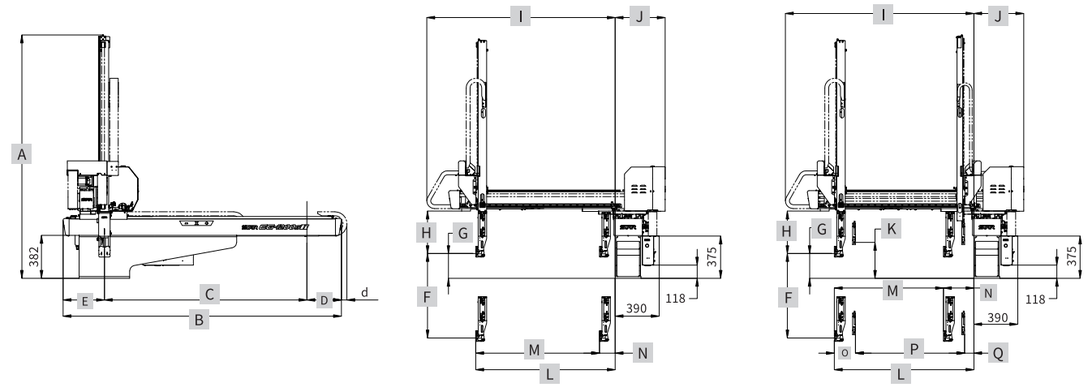

◎[ ]内的尺寸表示选项行程。/ Figure in [ ] shows option stroke.
◎水口夹的厚度为25mm。/ Thickness of runner chuck is basically about 25 mm.
◎姿势部厚度为98mm。但根据配管方式不同,此尺寸多少会有些不同。/ Thickness of posture area is basically about 98 mm (depends on tubing)
◎水口侧上下行程比制品侧上下行程长50mm。/ Thickness of posture area is basically about 50 mm (depends on tubing)
◎*1表示F尺寸为1400mm。 / *1 When dimension F is 1400 mm.
◎*2表示C尺寸为1600mm。/ *2 When dimension C is 1600 mm.
◎*3表示C尺寸为2000mm。/ *3 When dimension C is 2000 mm.
◎*4表示C尺寸为2200mm。/ *4 When dimension C is 2200 mm.

(mm)

机种 Model	A	B	C	D	E	F	G	H	I	J	K	L	M	N	O	P	Q
EG-1200II	2125 [2365]*1	2474 [2474]*2 [2874]*3 [2874]*4	1800 [1600]*2 [2000]*3 [2200]*4	307	367 [567]*2 [567]*3 [367]*4	1200 [1400]*1	220 ★	378	1675	443	–	1240	1100	140	–	–	–
EG-1200sII	2162 [2392]*1										270		970	270	188	970	82

※反操作时E值为322、[522]*2、[522]*3、[322]*4
D值为352、[352]*2、[352]*3、[352]*4
As anti-operator side E is 322、[522]*2、[522]*3、[322]*4
D is 352、[352]*2、[352]*3、[352]*4

★EG-1200(s)G尺寸为205mm.

※d值正操作时为65、[65]*2、[65]*3、[65]*4
反操作时为0、[0]*2、[0]*3、[0]*4
As operator side d is 65、[65]*2、[65]*3、[65]*4
anti-operator side d is 0、[0]*2、[0]*3、[0]*4

全伺服驱动机械手
Full servo drive robot

双截 Double ARM
100~350ton 注塑机用
Injection press range 100~350ton

综合参数 | GENERAL SPECIFICATIONS

电 源 Power Source	常用气压 Air Pressure	驱动方式 Drive System	姿势(气缸) Posture (Air Cylinder)	气动姿势部推力(气压:0.5Mpa时) Air Cylinder Driving Force (Air Pressure at 0.5Mpa) 最大可搬重量 Max. Load	姿势力矩 Posture Torque	控制箱 Control Box
AC200V ±10% 50/60Hz(三相) 3 Phase	0.5Mpa	AC伺服马达 AC Servo Motor	90°固定 90°Fixed	标准姿势部:5kg[10kg] Standard posture: 5kg[10kg] (含夹具重量 Incl Chuck Weight)	13.1N·m [22N·m]	STEC-NC3a

机 种 Model	行程(移动量)(mm) Stroke 制品上下 P Vertical	水口上下 R Vertical	前 后 Crosswise	走 行 Traverse	电源设备容量 (KVA) Electric Consumpiton	最大消费电力 (KW) Max Power Consumpiton	机器重量(kg) Net Weight 本 体 Main Body	操作盒 Pendant	空气消耗量 (Nℓ/周期) Air Consumption (Nℓ/Cycle)
EGW-800II	800 [1000] [1200]	–	90～790 [90~940]	1400 [1200] [1600] [1800]	2.9	1.7	264	2.0	2.0
EGW-800sII		850 [1050] [1250]	Ⓟ 280～790 Ⓡ 154～664 [Ⓟ 280～940 Ⓡ 154～814]		3.5	2.1	282		

◎[ ]尺寸表示选项行程。
◎本体重量包括控制箱及电缆线的重量。
◎ Ⓟ 表示制品侧手臂，Ⓡ表示水口侧手臂。

◎Figure in [ ] shows option stroke.
◎Net weight includes the weight of interlock box and driver box.
◎In the column of stroke,Ⓟstands for product side arm and Ⓡ stands for runner side arm.

外观尺寸 | OUTER DIMENSIONS

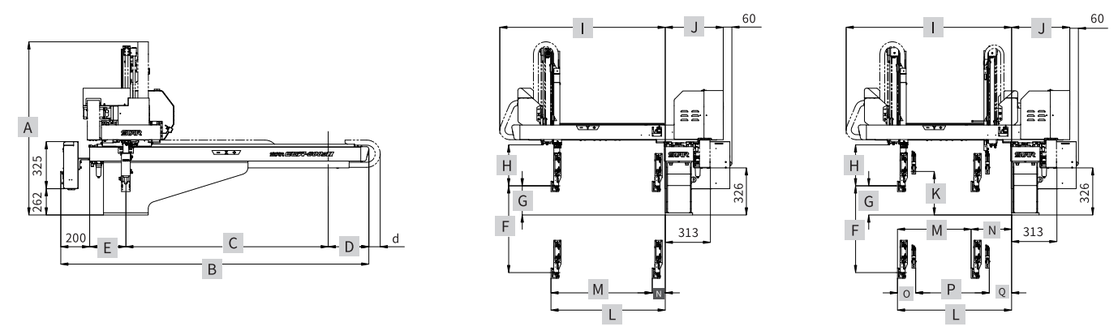

◎[ ]内的尺寸表示选项行程。/ Figure in [ ] shows option stroke.
◎水口夹的厚度为25mm。/ Thickness of runner chuck is basically about 25 mm.
◎姿势部厚度为69mm。但根据配管方式不同,此尺寸多少会有些不同。/ Thickness of posture area is basically about 69 mm (depends on tubing)
◎水口侧上下行程比制品侧上下行程长50mm。/ Thickness of posture area is basically about 50 mm (depends on tubing)
◎*1表示F尺寸为1000mm。 / *1 When dimension F is 1000 mm.
◎*2表示F尺寸为1200mm。/ *2 When dimension F is 1200 mm.
◎*3表示C尺寸为1200mm。/ *3 When dimension C is 1200 mm.
◎*4表示C尺寸为1600mm。/ *4 When dimension C is 1600 mm.
◎*5表示C尺寸为1800mm。/ *3 When dimension C is 1800 mm.
◎*6表示L尺寸为940mm。/ *4 When dimension L is 940 mm.

(mm)

机种 Model	A	B	C	D	E	F	G	H	I	J	K	L	M	N	O	P	Q
EGW-800II	1200 [1300]*1 [1400]*2	2130 [2130]*3 [2550]*4 [2550]*5	1400 [1200]*3 [1600]*4 [1800]*5	280 [280]*3 [300]*4 [300]*5	250 [450]*3 [450]*4 [250]*5	800 [1000]*1 [1200]*2	201 ★	284	1145 [1295]*6	402	–	790 [940]*6	700 [850]*6	90	–	–	–
EGW-800sII	1200 [1300]*1 [1400]*2										251		510 [660]*6	280	126	510 [660]*6	154

※反操作时E值为267、[467]*3、[467]*4、[267]*5
D值为263、[263]*3、[280]*4、[280]*5
As anti-operator side E is 267、[467]*3、[467]*4、[267]*5
D is 263、[263]*3、[280]*4、[280]*5

★EGW-800(s)G尺寸为140mm.

※d值正操作时为77、[77]*3、[45]*4、[45]*5
反操作时为35、[35]*3、[5]*4、[5]*5
As operator side d is 77、[77]*3、[45]*4、[45]*5
anti-operator side d is 35、[35]*3、[5]*4、[5]*5

全伺服驱动机械手
Full servo drive robot

双截 Double ARM

250~450ton 注塑机用

Injection press range 250~450ton

综合参数 | GENERAL SPECIFICATIONS

电 源 Power Source	常用气压 Air Pressure	驱动方式 Drive System	姿势(气缸) Posture (Air Cylinder)	气动姿势部推力(气压:0.5Mpa时) Air Cylinder Driving Force (Air Pressure at 0.5Mpa) 最大可搬重量 Max. Load	姿势力矩 Posture Torque	控制箱 Control Box
AC200V ±10% 50/60Hz(三相) 3 Phase	0.5Mpa	AC伺服马达 AC Servo Motor	90°固定 90°Fixed	标准姿势部:5kg[10kg] Standard posture: 5kg[10kg] (含夹具重量 Incl Chuck Weight)	22N·m	STEC-NC3a

机 种 Model	行程(移动量)(mm) Stroke 制品上下 P Vertical	水口上下 R Vertical	前 后 Crosswise	走 行 Traverse	电源设备容量 (KVA) Electric Consumpiton	最大消费电力 (KW) Max Power Consumpiton	机器重量(kg) Net Weight 本 体 Main Body	操作盒 Pendant	空气消耗量 (Nℓ/周期) Air Consumption (Nℓ/Cycle)
EGW-1000II	1000 [1200]	–	90～940	1800 [1600]	2.9	1.7	301	2.0	2.7
EGW-1000sII		1050 [1250]	Ⓟ 280～940 Ⓡ 154～814		3.5	2.1	320		

◎[ ]尺寸表示选项行程。
◎本体重量包括控制箱及电缆线的重量。
◎ Ⓟ 表示制品侧手臂，Ⓡ表示水口侧手臂。

◎Figure in [ ] shows option stroke.
◎Net weight includes the weight of interlock box and driver box.
◎In the column of stroke,Ⓟstands for product side arm and Ⓡ stands for runner side arm.

外观尺寸 | OUTER DIMENSIONS

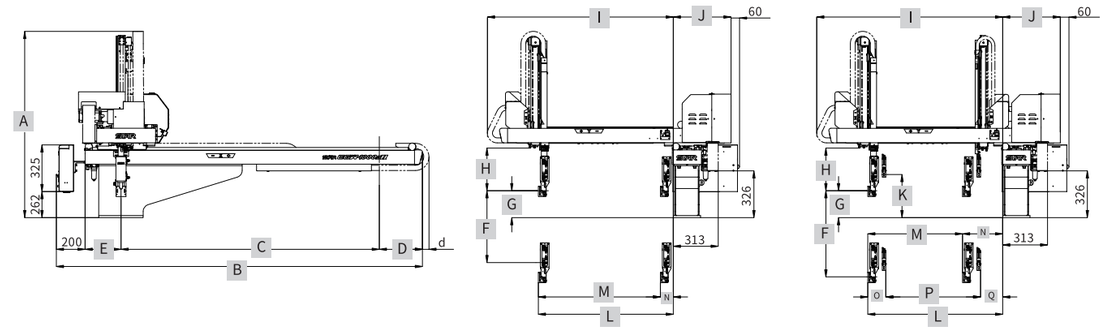

◎[ ]内的尺寸表示选项行程。/ Figure in [ ] shows option stroke.
◎水口夹的厚度为25mm。/ Thickness of runner chuck is basically about 25 mm.
◎姿势部厚度为74mm。但根据配管方式不同,此尺寸多少会有些不同。/ Thickness of posture area is basically about 74 mm (depends on tubing)
◎水口侧上下行程比制品侧上下行程长50mm。/ Runner side vertical stroke is 50 mm longer than that of product side.

◎*1表示F尺寸为1200mm。 / *1 When dimension F is 1200 mm.
◎*2表示C尺寸为1600mm。/ *2 When dimension C is 1600 mm.

(mm)

机种 Model	A	B	C	D	E	F	G	H	I	J	K	L	M	N	O	P	Q
EGW-1000II	1300 [1400]*1	2550 [2550]*2	1800 [1600]*2	300 [300]*2	250 [450]*2	1000 [1200]*1	187 ★	298	1295	402	–	940	850	90	–	–	–
EGW-1000sII	1300 [1400]*1										237		660	280	126	660	154

※反操作时E值为267、[467]*2
D值为280、[280]*2
As anti-operator side E is 267、[467]*2
D is 280、[280]*2

★EGW-1000(s)G尺寸为140mm.

※d值正操作时为45、[45]*2
反操作时为5、[5]*2
As operator side d is 45、[45]*2
anti-operator side d is 5、[5]*2

全伺服驱动机械手
Full servo drive robot

双截 Double ARM

350~850ton 注塑机用

Injection press range 350~850ton

综合参数 | GENERAL SPECIFICATIONS

电 源 Power Source	常用气压 Air Pressure	驱动方式 Drive System	姿势(气缸) Posture (Air Cylinder)	气动姿势部推力(气压:0.5Mpa时) Air Cylinder Driving Force (Air Pressure at 0.5Mpa) 最大可搬重量 Max. Load	姿势力矩 Posture Torque	控制箱 Control Box
AC200V ±10% 50/60Hz(三相) 3 Phase	0.5Mpa	AC伺服马达 AC Servo Motor	90°固定 90°Fixed	标准姿势部:13kg[18kg] Standard posture: 13kg[18kg] (含夹具重量 Incl Chuck Weight)	63.0N·m	STEC-NC3a

机 种 Model	行程(移动量)(mm) Stroke 制品上下 P Vertical	水口上下 R Vertical	前 后 Crosswise	走 行 Traverse	电源设备容量 (KVA) Electric Consumpiton	最大消费电力 (KW) Max Power Consumpiton	机器重量(kg) Net Weight 本 体 Main Body	操作盒 Pendant	空气消耗量 (Nℓ/周期) Air Consumption (Nℓ/Cycle)
EGW-1200II	1200 [1400] [1700]	–	158～1338 [158～1538]	1800 [1600] [2000] [2200]	3.5	2.1	498	2.0	12.91
EGW-1200sII		1250 [1450] [1750]	Ⓟ 328～1338 Ⓡ 137～1147 Ⓟ 328～1538 Ⓡ 137～1347		4.7	2.8	542		

◎[ ]尺寸表示选项行程。
◎本体重量包括控制箱及电缆线的重量。
◎ Ⓟ 表示制品侧手臂，Ⓡ表示水口侧手臂。

◎Figure in [ ] shows option stroke.
◎Net weight includes the weight of interlock box and driver box.
◎In the column of stroke,Ⓟstands for product side arm and Ⓡ stands for runner side arm.

外观尺寸 | OUTER DIMENSIONS

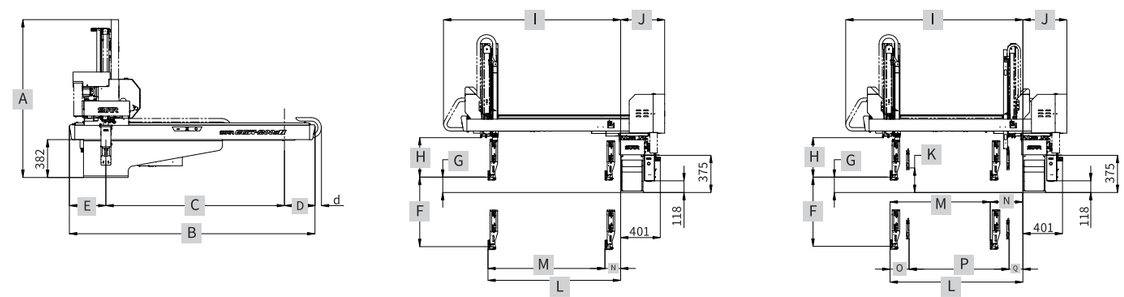

◎[ ]内的尺寸表示选项行程。/ Figure in [ ] shows option stroke.
◎水口夹的厚度为25mm。/ Thickness of runner chuck is basically about 25 mm.
◎姿势部厚度为74mm。但根据配管方式不同,此尺寸多少会有些不同。/ Thickness of posture area is basically about 74 mm (depends on tubing)
◎水口侧上下行程比制品侧上下行程长50mm。/ Runner side vertical stroke is 50 mm longer than that of product side.

◎*1表示F尺寸为1400mm。 / *1 When dimension F is 1400 mm.
◎*2表示F尺寸为1700mm。 / *2 When dimension F is 1700 mm.
◎*3表示C尺寸为1600mm。 / *3 When dimension C is 1600 mm.
◎*4表示C尺寸为2000mm。 / *4 When dimension C is 2000 mm.
◎*5表示C尺寸为2200mm。 / *5 When dimension C is 2200 mm.
◎*6表示L尺寸为1538mm。 / *6 When dimension L is 1538 mm.

(mm)

机种 Model	A	B	C	D	E	F	G	H	I	J	K	L	M	N	O	P	Q
EGW-1200II	1592 [1705]*1 [1849]*2	2474 [2474]*3 [2874]*4 [2874]*5	1800 [1600]*3 [2000]*4 [2200]*5	307	367 [567]*3 [567]*4 [367]*5	1200 [1400]*1 [1700]*2	155 ★	399	1785 [2030]*6	444	–	1338 [1538]*6	1180 [1380]*6	158	–	–	–
EGW-1200sII	1592 [1705]*1 [1849]*2										205		1010 [1210]*6	328	191	1010 [1210]*6	137

※反操作时E值为322、[522]*3、[522]*4、[322]*5
D值为352、[352]*3、[352]*4、[352]*5
As anti-operator side E is 322、[522]*3、[522]*4、[322]*5
D is 352、[352]*3、[352]*4、[352]*5

★EGW-1200(s)G尺寸为205mm.

※d值正操作时为65、[65]*3、[65]*4、[65]*5
反操作时为0、[0]*3、[0]*4、[0]*5
As operator side d is 65、[65]*3、[65]*4、[65]*5
anti-operator side d is 0、[0]*3、[0]*4、[0]*5

周边自动化设备 | PERIPHERALS

为提高客户生产现场的自动化水平，提高生产效率、减少人手，STAR还为客户提供与机械手连动使用的FA自动化、省力化设备等周边机器。

STAR has designed for peripheral equipment of FA system and labor-saving to improve the automation level of customer production field, increase production efficiency and cut down labors.

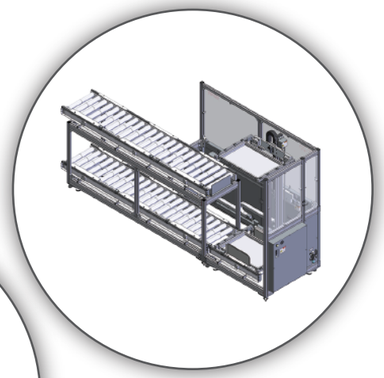

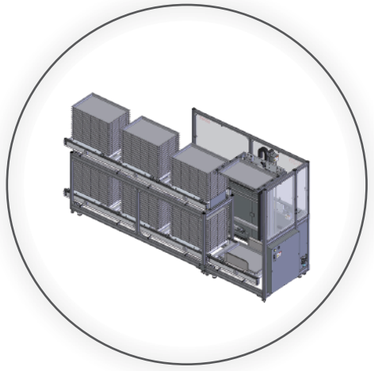

存储装置
PALLET CHANGER

STAR 自动化设备 | STAR AUTOMATION EQUIPMENT

其他自动化设备
OTHER AUTOMATION EQUIPMENT

▲ 输送带
CONVEYOR

▼ 码垛机械手
PALLETIZER

▼ 桁架机械手
GANTRY LOADER

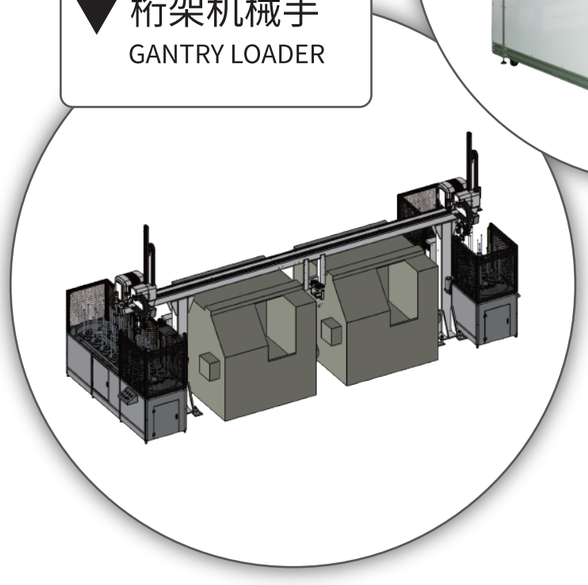

STAR eins安宜思夹具零配件 | STAR eins Chuck parts

机械手用抓手零部件 | Robot End of Arm Tooling

机器人抓手用零配件

eins 安宜思

By STAR SEIKI s ince 1964

eins夹具部品网上商城
http://www.eins1.cn

星精机械（STAR SEIKI）集团拥有60年注塑成型品取出的经验，
eins为集团下属机器人抓手品牌，得到了客户的一致认可。超2000种高品质抓手配件，
且根据客户需求提供最合适的机器人抓手和自动剪切的整体解决方案。
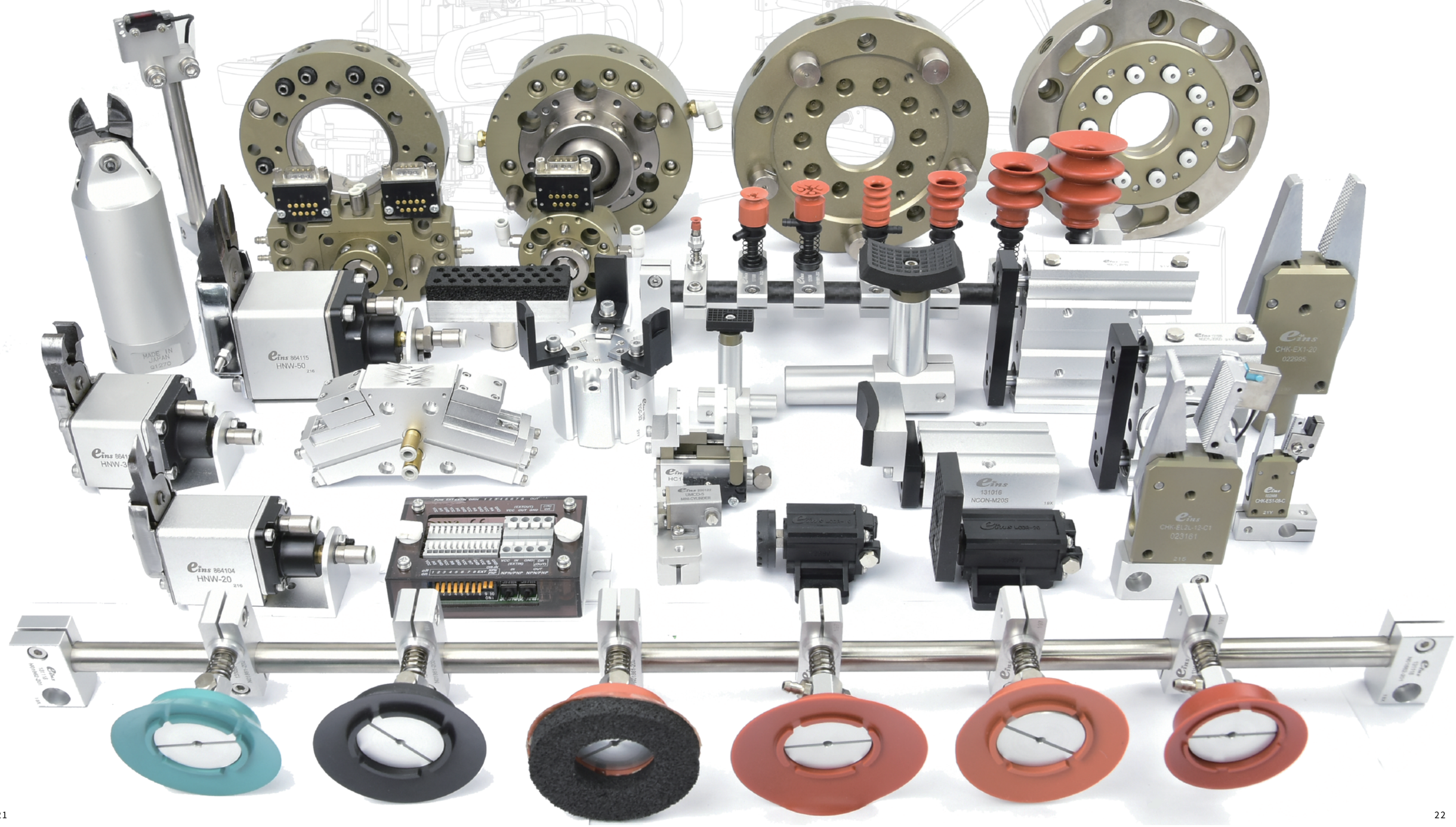
STAR SEIKI Group has 60 years of experience in injection molding products unloading.eins is a robot End Of Arm Tooling brand under the group, which has been unanimously recognized by customers.More than 2000 kinds of high-quality gripper accessories, and provide the most suitable robot gripper and automatic gate cutting overall solution according to customer needs.